EH40 Series
1/4 -1/2" Pipe Size

Features:

The full port EH40 is great for a wide range of media. This pilot operated valve has become a popular and effective choice in the emerging Hydrogen Dispensing market. The EH40 is also an excellent valve to control the flow of high pressure air, water, hydrogen, nitrogen, and other gases or light liquids compatible with materials of construction. Available in both 1/4" and 1/2" sizes, the EH40 is the workhorse of our collection and offers a cartridge design that alleviates your demanding maintenance requirements. The EH40 requires a 50 PSIG minimum pressure differential between inlet and outlet for operation. The valve's simple design with few moving components have made it a great choice for inlet pressures as high as 10,000 PSIG. The Normally Closed EH40 valves must be mounted upright and vertical, while the Normally Open EH40 valves are universal mount. **Filters recommended for all applications.**

Dimensions

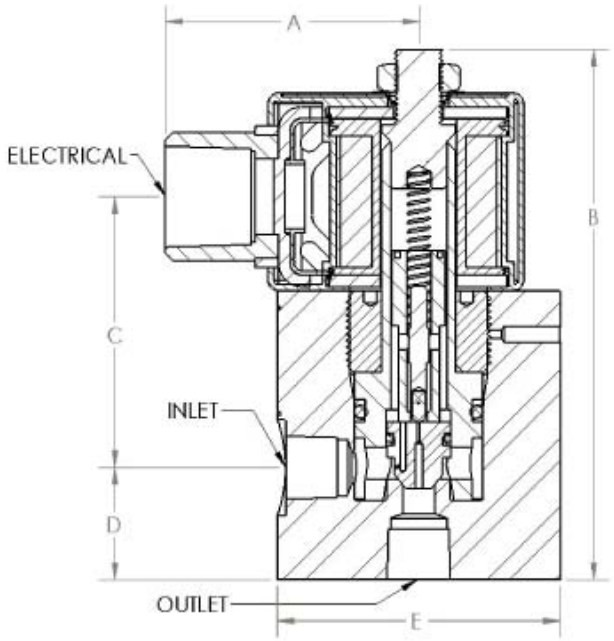

Normally Closed

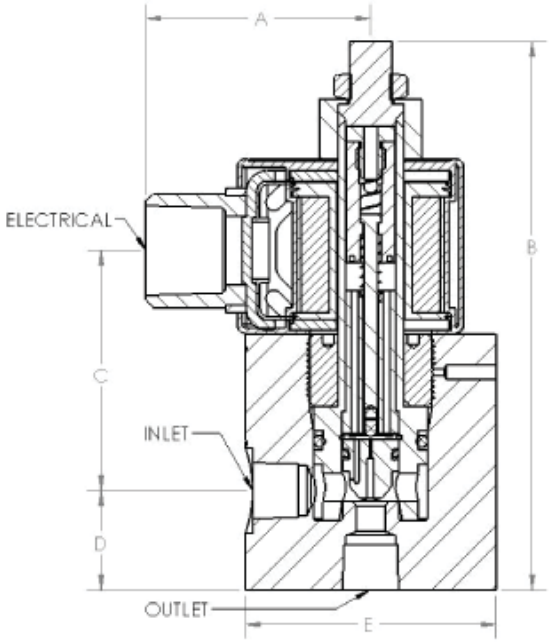

Normally Open

	Inlet/ Outlet	Electrical	Ship Weights (lbs.)	Reference Dimensions (inches)				
				A	B	C	D	E
EH40-04 Normally Closed	¼" NPT	½" NPT Conduit	2.85	2.0	4.1	2.1	0.9	ø 2.20
EH40-04 Normally Open			3.10	2.0	4.8	2.1	0.9	ø 2.20
EH40-08 Normally Closed	½" NPT		6.05	2.0	4.7	2.2	1.3	ø 2.95
EH40-08 Normally Open			6.04	2.0	5.4	2.2	1.3	ø 2.95

How To Order

Base Model Number		Connection Size		AC/DC Voltage and Hertz		Suffix Option Field (s)
EH40	—		—		—	

04	¼"
08	½"

A024	24 / 60
A120	120 / 60
A240	240 / 60
D012	12 DC
D024	24 DC
D120	120 DC

DN	Din Connector (Not Explosion Proof)
GS	General Service (Not Explosion Proof)
HY	Hydrogen Service (Helium leak test)
NO	Normally Open
OX	Oxygen Clean
TC	Tube Connector
T5	Class 5 Leakage Test
XP	22 Watt Coil (Higher Pressure)
S4	1/4” Connection per SAE J1926
S8	1/2” Connection per SAE J1926

Possible EH40 Options & Add-Ons

72” Lead Length

Din Connector

Screw Terminal

¼ Tab (spade)

General Service

Hydrogen Service

Normally Open

Oxygen Clean

SAE Port

Tube Connector

Class V Leakage Testing

Stainless Steel Tags

Viton O-Rings

22 W Coil

The following are standard on the EH40:

Explosion Proof

Stainless Steel Valve Body

NEMA 4X

Certifications

CRN - Canadian Registration Number

(856) 829-4580
info@magnatrol.com
www.clarkcooper.com

Construction

Valve Body:	316 SS
Piston:	PEEK®
O Ring (Standard):	Buna-N (-50° to 225°F)
O Ring (Optional):	Viton (0° to 400°F)
Piston Rings:	302 SS / PTFE / Buna / Viton
Cartridge:	316 SS & 430 SS
Pilot / Seal:	303 SS / PTFE
Spring:	302 SS
Plunger:	430 SS
Bonnet Retainer:	430 SS

*Consult Sales for Fluid Temps Exceeding 225°F.

Pressure

Maximum pressures shown are measured in PSIG

	¼" Pipe Size	½" Pipe Size
Normally Closed AC Voltage (Standard):	7,500	7,500
Normally Closed AC Voltage (Higher Wattage):	10,000	10,000
Normally Closed DC Voltage (Standard):	3,500	3,600
Normally Closed DC Voltage (Higher Wattage):	10,000	7,200
Normally Open AC Voltage:	5,500	8,500
Normally Open DC Voltage (Higher Wattage):	5,500	6,200
Minimum Pressure Differential:	50	50

Flow

	¼” Pipe Size	½” Pipe Size
C_v	1.1	4.5

Electrical (Coil)

	Standard	High Wattage
Power:	10 Watts	22 Watts
AC Inrush:	1 amp @ 120V AC	2.5 amp @ 120V AC
AC Holding:	0.1 amp @ 120V AC	0.2 amp @ 120V AC
Insulation:	Class “F”	Class “H”
Duty:	Continuous	Continuous
Connection:	1/2” NPT, 18” Leads	1/2” NPT, 18” Leads
Enclosure		
Explosion Proof (Standard):	NEMA 3, 3S, 4, 4X, 7, 9	NEMA 3, 3S, 4, 4X, 7, 9
General Service:	NEMA 1, 2, 3, 3S, 4, 4X	NEMA 1, 2, 3, 3S, 4, 4X

Possible Media

General Gases and Liquids

Fuels & Light Oils

Flammable Gases

Hydrogen

Oxygen

Corrosives

Sea & Salt Water

Viscous Liquids

Steam

Cryogenics

(856) 829-4580
info@magnatrol.com
www.clarkcooper.com